Surge protection device - LIT 4X1-24 - 2804649

Technical data

General

Housing material	PBT
Flammability rating according to UL 94	V-0
Color	anthracite grey RAL 7016
Mounting type	DIN rail: 35 mm
Type	DIN rail module, one-piece
Direction of action	Line-Earth Ground

Protective circuit

IEC test classification	C1
	C2
	C3
	D1
Nominal voltage U_N	24 V DC
Maximum continuous voltage U_C	36 V DC
	25 V AC
Rated current	350 mA (40° C)
Operating effective current I_C at U_C	≤ 2 µA
Residual current I_{PE}	≤ 8 µA
Nominal discharge current I_n (8/20) µs (core-earth)	5 kA
Pulse discharge current I_{imp} (10/350) µs (core-ground)	500 A
	2 kA (in total)
Total discharge current I_{total} (8/20) µs	20 kA
Max. discharge current I_{max} (8/20) µs maximum (Core-Earth)	10 kA
	20 kA (in total)
Nominal pulse current Ian (10/1000) µs (Core-Earth)	50 A
	200 A (in total)
Output voltage limitation at 1 kV/µs (core-earth) spike	≤ 60 V
Residual voltage at I_n (conductor-ground)	≤ 50 V
Residual voltage with Ian (10/1000)µs (conductor-ground)	≤ 60 V
Voltage protection level U_p (core-ground)	≤ 60 V (C1 - 500 V / 250 A)
	≤ 95 V (C2 - 10 kV / 5 kA)
	≤ 55 V (C3 - 10 A)
	≤ 55 V (C3 - 50 A)
	≤ 250 V (D1 - 500 A)
Response time tA (core-earth)	≤ 1 ns
Input attenuation aE, asym.	typ. 0.3 dB (1 MHz / 50 Ω)
	typ. 0.2 dB (350 kHz / 150 Ω)
Cut-off frequency fg (3 dB), asym. (PE) in 50 Ohm system	typ. 6 MHz
Cut-off frequency fg (3 dB), asym. (PE) in 150 Ohm system	typ. 2 MHz
Capacity	≤ 1.3 nF (per channel)
Resistance in series	3.3 Ω ±20 %

Ing. Olga Marecos de Sanabria
Gerente de Agua No Contabilizada
essapsa

acciona Agua

Lic. Carlos José Arce López
Presidente ESSAP S.A.

Surge protection device - LIT 4X1-24 - 2804649

Technical data

Protective circuit

Surge protection fault message	none
Max. required back-up fuse	315 mA (T)
Impulse durability (conductor-ground)	C1 - 500 V / 250 A
	C2 - 10 kV/5 kA
	C3 - 50 A
	D1 - 500 A
Alternating current carrying capacity (conductor-ground)	5 A - 1 s

Connection data

Connection method	Screw connection
Screw thread	M3
Tightening torque	0.8 Nm
Stripping length	8 mm
Conductor cross section flexible	0.2 mm² ... 2.5 mm²
Conductor cross section solid	0.2 mm² ... 2.5 mm²
Conductor cross section AWG	24 ... 14

Connection, equipotential bonding

Connection method	DIN rail NS35

Standards and Regulations

Standards/specifications	IEC 61643-21 A2:2012
	EN 61643-21 2001 + A1:2009 + A2:2013

Environmental Product Compliance

China RoHS	Environmentally Friendly Use Period = 50
	For details about hazardous substances go to tab “Downloads”, Category “Manufacturer's declaration”

Drawings

Pictogram

Diagram

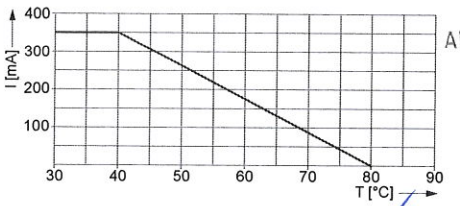

Abg. Carlos José Arce López
Presidente ESSAP S.A.

acciona Agua

Ing. Olga Marecos de Sanabria
Gerente de Agua No Contabilizada
essapsa

Surge protection device - LIT 4X1-24 - 2804649

Application drawing

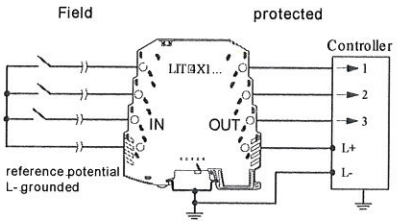

Dimensional drawing

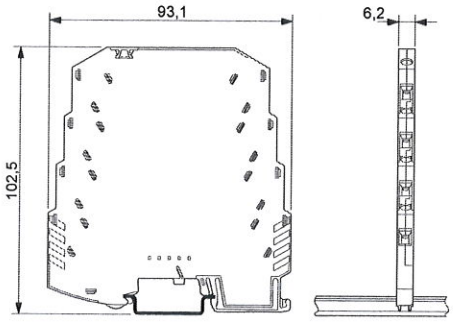

Circuit diagram

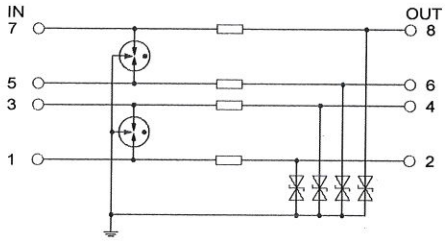

Classifications

eCl@ss

eCl@ss 4.0	27140201
eCl@ss 4.1	27130801
eCl@ss 5.0	27130801
eCl@ss 5.1	27130801
eCl@ss 6.0	27130807
eCl@ss 7.0	27130807
eCl@ss 8.0	27130807
eCl@ss 9.0	27130807

ETIM

ETIM 2.0	EC000943
ETIM 3.0	EC000943
ETIM 4.0	EC000943
ETIM 5.0	EC000943
ETIM 6.0	EC000943

UNSPSC

UNSPSC 6.01	30212010
UNSPSC 7.0901	39121610
UNSPSC 11	39121610
UNSPSC 12.01	39121610

Abg. Carlos José Arce López
Presidente ESSAP S.A.

Ing. Olga Marecos de Sanabria
Gerente de Agua No Contabilizada
essap sa

acciona Agua

Surge protection device - LIT 4X1-24 - 2804649

Classifications

UNSPSC

UNSPSC 13.2	39121620

Approvals

Approvals

Approvals

UL Listed / EAC / EAC / DNV GL

Ex Approvals

Approval details

UL Listed	☐	http://database.ul.com/cgi-bin/XYV/template/LISEXT/1FRAME/index.htm	FILE E 138168
EAC	☐		EAC-Zulassung
EAC	☐		RU C-DE.A*30.B01561
DNV GL		http://exchange.dnv.com/tari/	TAE00001N8

Phoenix Contact 2018 © - all rights reserved
http://www.phoenixcontact.com

Abg. Carlos José Arce Lopez
Presidente ESSAP S.A.

acciona Agua

Ing. Olga Marecos de Sanabria
Gerente de Agua No Contabilizada
essapsa

Product datasheet
Characteristics

BMXAMI0810
isolated analog input module

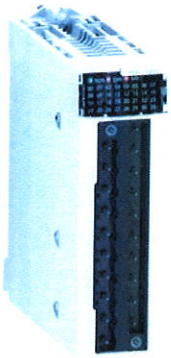

Main

Range of product	Modicon M340 automation platform
Product or component type	Analog input module
Electrical connection	1 connector 28 ways
Input output isolation	Isolated
Input level	High level
Analogue input number	8
Analogue input type	Current +/- 20 mA Current 0...20 mA Current 4...20 mA Voltage +/- 10 V Voltage +/- 5 V Voltage 0...10 V Voltage 0...5 V Voltage 1...5 V

Complementary

Analog/digital conversion	16 bits
Analogue input resolution	15 bits + sign
Input impedance	10 MOhm
Permitted overload on inputs	+/- 30 mA 0...20 mA +/- 30 mA 4...20 mA +/- 30 V +/- 10 V +/- 30 V +/- 5 V +/- 30 V 0...10 V +/- 30 V 0...5 V +/- 30 V 1...5 V +/- 30 mA +/- 20 mA
Internal conversion resistor	250 Ohm
Precision of internal conversion resistor	0.1 % - 15 ppm/°C
Type of filter	First order digital filtering
Fast read cycle time	1 ms + 1 ms x number of channels used
Nominal read cycle time	9 ms for 8 channels
Measurement error	<= 0.1 % of full scale +/- 10 V 0...60 °C <= 0.1 % of full scale +/- 5 V 0...60 °C <= 0.1 % of full scale 0...10 V 0...60 °C <= 0.1 % of full scale 0...5 V 0...60 °C <= 0.1 % of full scale 1...5 V 0...60 °C <= 0.3 % of full scale +/- 20 mA 0...60 °C <= 0.3 % of full scale 0...20 mA 0...60 °C <= 0.3 % of full scale 4...20 mA 0...60 °C 0.15 % of full scale +/- 20 mA 25 °C 0.15 % of full scale 0...20 mA 25 °C 0.15 % of full scale 4...20 mA 25 °C 0.08 % of full scale +/- 10 V 25 °C 0.08 % of full scale 0...10 V 25 °C 0.08 % of full scale 0...5 V 25 °C 0.08 % of full scale 1...5 V 25 °C 0.08 % of full scale +/- 5 V 25 °C <= 0.2 % of full scale +/- 10 V 0...60 °C
Temperature drift	30 ppm/°C 50 ppm/°C
Common mode between channels	>= 80 dB
Digital value format	+/- 10000 by default +/- 32000 in user scale
Isolation voltage	300 V DC between channels 1400 V DC between channels and ground 1400 V DC between channels and bus

Abg. Carlos José Arce Lopez
Presidente ESSAP S.A.

Ing. Olga Cambria
Gerente de Agua No Contabilizada
essap sa

The information provided in this documentation contains general descriptions and/or technical characteristics of the performance of the products contained herein.
This documentation is not intended as a substitute for and is not to be used for determining suitability or reliability of these products for specific user applications.
It is the duty of any such user or integrator to perform the appropriate and complete risk analysis, evaluation and testing of the products with respect to the relevant specific application or use thereof.
Neither Schneider Electric Industries SAS nor any of its affiliates or subsidiaries shall be responsible or liable for misuse of the information contained herein.

Measurement resolution	0.36 mV +/- 10 V 0.36 mV 0...10 V 0.36 mV 0...5 V 0.36 mV 1...5 V 0.36 mV +/- 5 V 1.4 µA +/- 20 mA 1.4 µA 0...20 mA 1.4 µA 4...20 mA
Maximum conversion value	+/- 11.4 V +/- 10 V +/- 11.4 V 0...10 V +/- 11.4 V 0...5 V +/- 11.4 V 1...5 V 0...30 mA +/- 20 mA 0...30 mA 0...20 mA 0...30 mA 4...20 mA 0...30 mA +/- 5 V
Status LED	1 LED green RUN 1 LED per channel green channel diagnostic 1 LED red ERR 1 LED red I/O
Product weight	0.165 kg
Current consumption	150 mA at 3.3 V DC 45 mA at 24 V DC

Environment

ambient air temperature for operation	0...60 °C
relative humidity	10...95 % without condensation
IP degree of protection	IP20
protective treatment	TC

Offer Sustainability

Sustainable offer status	Green Premium product
RoHS (date code: YYWW)	Compliant - since 0901 - Schneider Electric declaration of conformity
REACh	Reference not containing SVHC above the threshold
Product environmental profile	Available
Product end of life instructions	Available

Contractual warranty

Warranty period	18 months

Modules Mounted on Racks

Dimensions

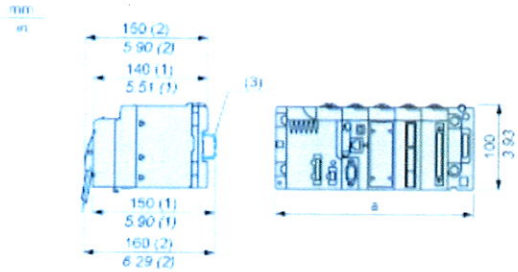

Abg. Carlos José Arce López
Presidente ESSAP S.A.

(1) With removable terminal block (cage, screw or spring).

(2) With FCN connector.

(3) On AM1 ED rail: 35 mm wide, 15 mm deep. Only possible with BMXXBP0400/0400H/0600/0600H/0800/0800H rack.

Rack references	a in mm	a in in.
BMXXBP0400 and BMXXBP0400H	242.4	09.54
BMXXBP0600 and BMXXBP0600H	307.6	12.11
BMXXBP0800 and BMXXBP0800H	372.8	14.68

Ing. Olga Manzanos de Cantabria
Gerente de Agua No Contabilizada
essapsa

BMXXBP1200 and BMXXBP1200H	503.2	19.81

Wiring Diagram

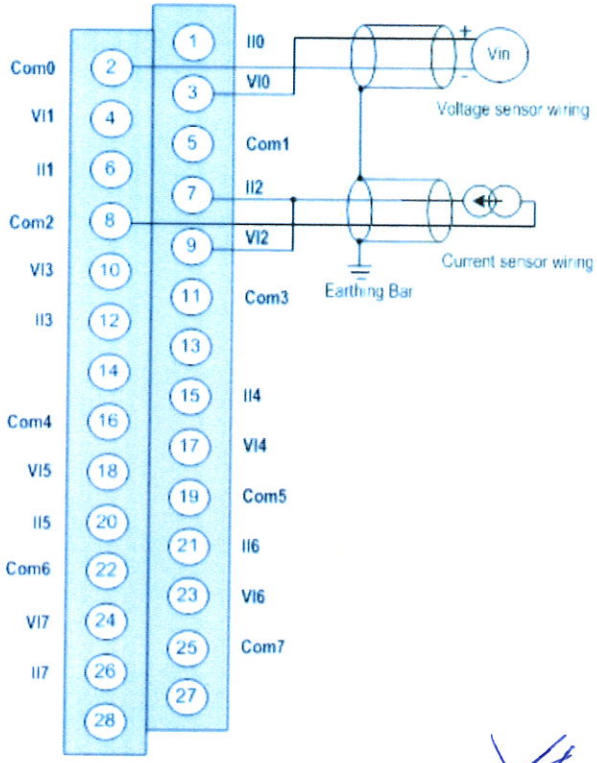

VIx + pole input for channel x

COM x- pole input for channel x

IIx current reading resistor + input

Channel 0 voltage sensor

Channel 1 2-wire current sensor

Abg. Carlos José Arce Lopez
Presidente ESSAP S.A.

acciona Agua

Ing. Olga Marecos de Sanabria
Gerente de Agua No Contabilizada
essap sa

Product datasheet
Characteristics

BMXCPS2010

power supply module X80 - 24 V DC - 16.8 W

Main

Range of product	Modicon M340 automation platform
Product or component type	Power supply module
Product compatibility	Not compatible with BMEXBP..02
Primary voltage	24 V isolated
Supply circuit type	DC
Total useful secondary power	<= 16.8 W
Secondary power	16.8 W 24 V DC I/O module power supply and processor 8.3 W 3.3 V DC I/O module logic power supply

Complementary

Primary voltage limit	18...31.2 V
Power supply input current	1 A 24 V
Inrush current	30 A 24 V
I^2t on activation	<= 0.6 A^2.s 24 V
It on activation	<= 0.15 A.s 24 V
Protection type	Internal fuse not accessible primary circuit Overload protection secondary circuit, 24 V sensor power supply Overvoltage protection secondary circuit, 24 V sensor power supply Short-circuit protection secondary circuit, 24 V sensor power supply
Current at secondary voltage	0.7 A 24 V DC I/O module power supply and processor 2.5 A 3.3 V DC I/O module logic power supply
Power dissipation in W	<= 8.5 W
Status LED	1 LED green rack voltage OK
Control type	RESET push-button cold restart
Electrical connection	1 connector 2 pin(s) alarm relay 1 connector 5 pin(s) line supply, protective earth, 24 V DC input sensor
Cable length	20 m power supply cable copper 1.5 mm^2 30 m power supply cable copper 2.5 mm^2
Insulation resistance	>= 10 mOhm primary/ground >= 10 mOhm primary/secondary
Product weight	0.29 kg

Environment

immunity to microbreaks	<= 1 ms
dielectric strength	1500 V primary/ground 1500 V primary/secondary
IP degree of protection	IP20
standards	IACS E10
ambient air temperature for storage	-40...85 °C
ambient air temperature for operation	0...60 °C
relative humidity	10...95 % without condensation
protective treatment	TC

Offer Sustainability

Sustainable offer status	Green Premium product
RoHS (date code: YYWW)	Compliant - since 0722 - Schneider Electric declaration of conformity
REACh	Reference contains SVHC above the threshold
Product environmental profile	Available

The information provided in this documentation contains general descriptions and/or technical characteristics of the performance of the products contained herein.
This documentation is not intended as a substitute for and is not to be used for determining suitability or reliability of these products for specific user applications.
It is the duty of any such user or integrator to perform the appropriate and complete risk analysis, evaluation and testing of the products with respect to the relevant specific application or use thereof.
Neither Schneider Electric Industries SAS nor any of its affiliates or subsidiaries shall be responsible or liable for misuse of the information contained herein.

Ing. Olga Marenco Sanchez
Gerente de Agua No Contabilizada
essap sa

Schneider Electric

acciona Agua

Abg. Carlos José Arce López
Presidente ESSAP S.A.

Product end of life instructions	Available

Contractual warranty

Warranty period	18 months

Modules Mounted on Racks

Dimensions

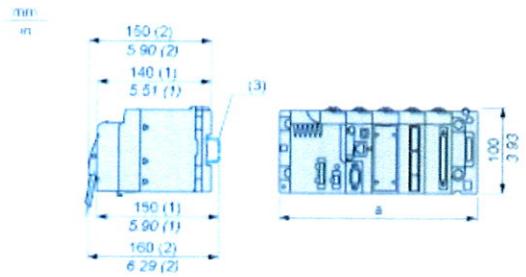

(1) With removable terminal block (cage, screw or spring).

(2) With FCN connector.

(3) On AM1 ED rail: 35 mm wide, 15 mm deep. Only possible with BMXXBP0400/0400H/0600/0600H/0800/0800H rack.

Rack references	a in mm	a in in.
BMXXBP0400 and BMXXBP0400H	242.4	09.54
BMXXBP0600 and BMXXBP0600H	307.6	12.11
BMXXBP0800 and BMXXBP0800H	372.8	14.68
BMXXBP1200 and BMXXBP1200H	503.2	19.81

Connection of Direct Current Power Supply Modules to a 24 Vdc or 48 Vdc Floating Direct Current Network

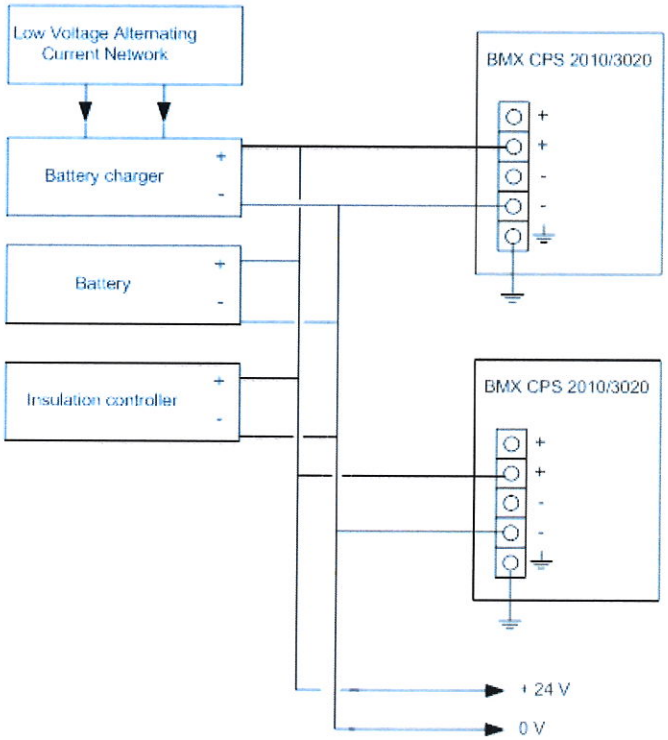

24 VDC floating network for the power supply of sensors, actuators and input/out modules.

Abg. Carlos José Arce Lopez
Presidente ESSAP S.A.

Ing. Olga Marenco de Sanabria
Gerente de Agua No Capitalizada
essapsa

Connection of Direct Current Power Supply Modules to an Alternating Current Network

Connection of a Single Rack PLC Station

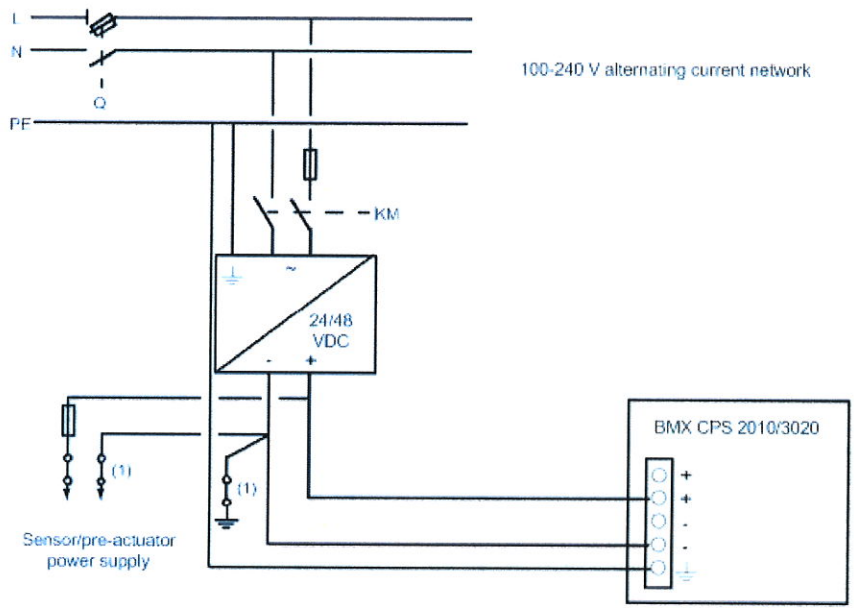

Q General isolator

KM Line contactor or circuit breaker

(1) Insulation connector bar for locating grounding errors

Connection of a Multi-Rack PLC Station

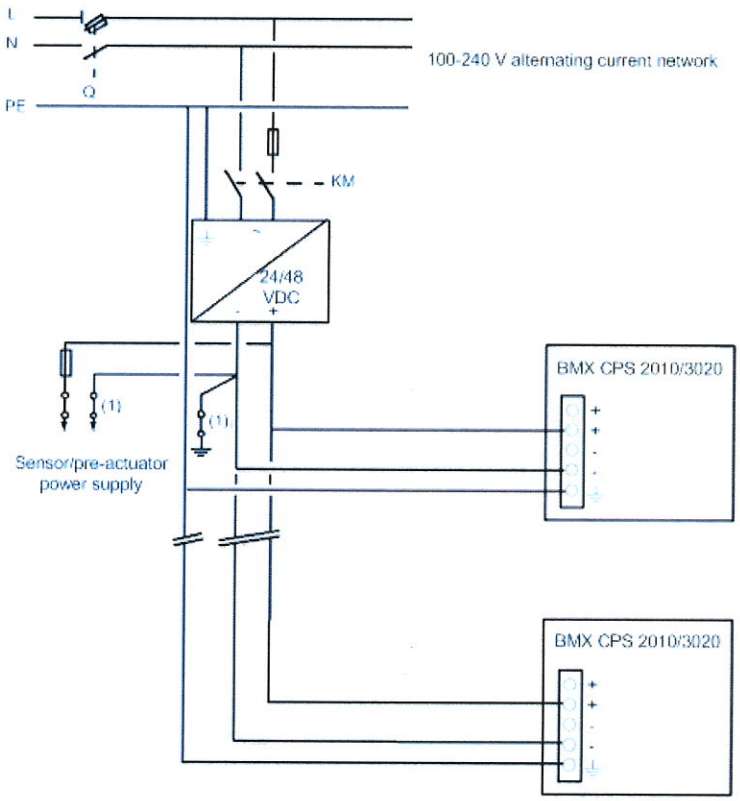

Q General isolator

KM Line contactor or circuit breaker

(1) Insulation connector bar for locating grounding errors

Abg. Carlos José Arce López
Presidente ESSAP S.A.

Ing. Olga Sánchez de Lombria
Gerente de Agua No Contabilizada
essap sa

Product data sheet
Characteristics

BMXXBP0400
rack M340 - 4 slots - panel, plate or DIN rail mounting

Product availability : Stock - Normally stocked in distribution facility

Price* : 134.00 USD

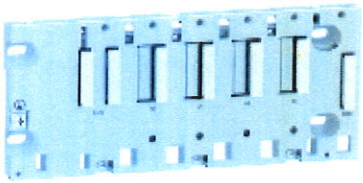

Main

Range of product	Modicon M340 automation platform
Accessory / separate part type	Rack

Complementary

Number of slots	4 bus X
Product compatibility	I/O module BMXCPS power supply BMXP34 processor Specific application module
Power consumption in W	1 W
Electrical connection	1 connector (XBE) expansion module
Fixing mode	By 4 M6 screws plate By clips 35 mm symmetrical DIN rail By 4 screws 0.17...0.25 in (4.32...6.35 mm) panel
Product weight	1.39 lb(US) (0.63 kg)

Environment

IP degree of protection	IP20
Ambient air temperature for operation	32...140 °F (0...60 °C)
Relative humidity	10...95 % without condensation
Protective treatment	TC

Ordering and shipping details

Category	18160 - MODICON M340
Discount Schedule	PC34
GTIN	00785901476900
Nbr. of units in pkg.	1

Disclaimer: This documentation is not intended as a substitute for and is not to be used for determining suitability or reliability of these products for specific user applications

Schneider

Ing. Olga Marecos de Sanabria
Gerente de Agua No Contabilizada
essapsa

Abg. Carlos José Arce López
Presidente ESSAP S.A.

acciona Agua

Package weight(Lbs)	1.5
Returnability	Y
Country of origin	FR

Offer Sustainability

Sustainable offer status	Green Premium product
RoHS (date code: YYWW)	Compliant - since 0612 - Schneider Electric declaration of conformity Schneider Electric declaration of conformity
REACh	Reference not containing SVHC above the threshold Reference not containing SVHC above the threshold
Product environmental profile	Available
Product end of life instructions	Available

Contractual warranty

Warranty period	18 months

acciona
Agua

Ing. Olga Marecos de Sanabria
Gerente de Agua No Contabilizada
essap sa

Abg. Carlos José Arce López
Presidente ESSAP S.A.

BMXXBP0400

Dimensions

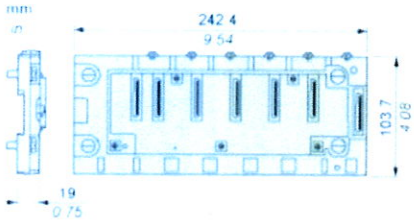

acciona
Agua

Ing. Olga Marecos de Sanabria
Gerente de Agua No Contabilizada
essap sa

Abg. Carlos José Arce López
Presidente ESSAP S.A.

BMXXBP0400

Rack Installation in a Cabinet

Minimum Clearance

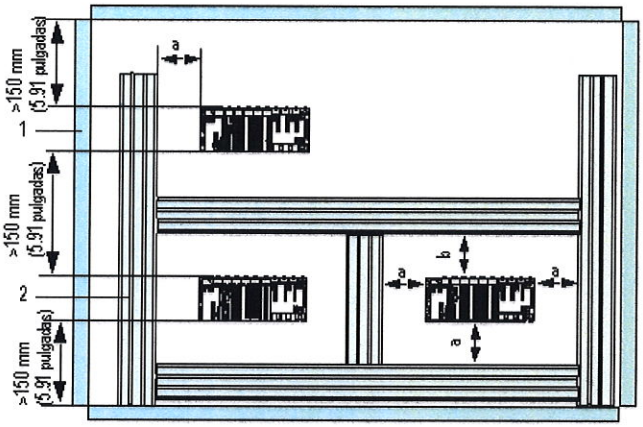

a Greater than or equal to 60 mm (2.36 in.)
b Greater than or equal to 80 mm (3.15 in.)
1 Installation or casing
2 Wiring duct or tray

acciona
Agua

Ing. Olga Marecos de Sanabria
Gerente de Agua No Contabilizada
essapsa

Abg. Carlos José Arce López
Presidente ESSAP S.A.

Mounting and Fastening the Racks

Mounting on 35 mm (1.38 in.) Wide and 15 mm (0.59 in.) Deep DIN Rails with Four HM6 Screws

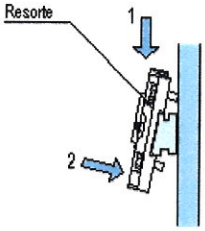

Mounting on Panels

Dimensions in mm / in.

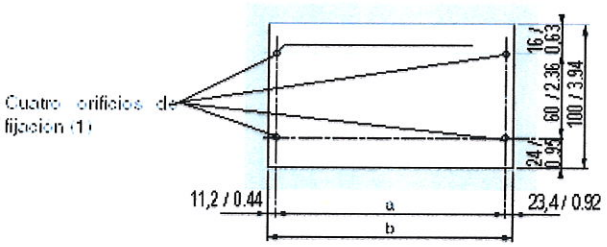

(1) The diameter of the fastening holes must allow use of M4, M5, M6 and UNC #6 screws.

Rack	a	b	Size of the rack and extension module
BMXXBP040 and BMXXBP0400H	207.8 mm (8.187 in.)	242.2 mm (9.543 in.)	243.4 mm (9.59 in.)
BMXXBP0600 and BMXXBP0600H	273 mm (10.756 in.)	307.6 mm (12.12 in.)	308.8 mm (12.167 in.)
BMXXBP0800 and BMXXBP0800H	338.2 mm (13.325 in.)	372.8 mm (14.69 in.)	374 mm (14.736 in.)
BMXXBP1200 and BMXXBP1200H	468.6 mm (18.463 in.)	503.2 mm (19.826 in.)	504.4 mm (19.873 in.)

Mounting on Telequick AM1-PA and AM3-PA Mounting Grids

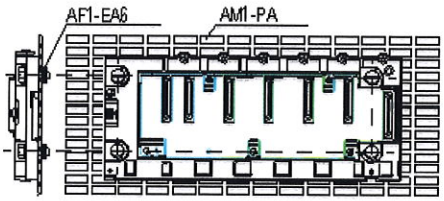

Fasten the rack with four M4, M5, M6 or UNC #6 screws.

acciona Agua

Ing. Olga Marecos de Sanabria
Gerente de Agua No Contabilizada
essapsa

Abg. Carlos José Arce López
Presidente ESSAP S.A.

Product data sheet
Characteristics

BMXPRA0100
Modicon X80 Peripheral Remote IO Adaptor module

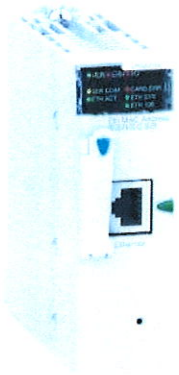

Main

Range of product	Modicon X80
Product or component type	Peripheral remote I/O adaptor

Complementary

Number of port	1
Integrated connection type	Ethernet/IP for device network
Communication port protocol	Modbus TCP
Realtime clock	With
Memory capacity	96 kB removable memory 448 kB internal memory
Application structure	1 master task
Local signalling	1 LED green for Ethernet network status (link) 1 LED green for Ethernet link diagnostics (STS) 1 LED red for memory card fault (CARD ERR) 1 LED green for activity on Ethernet network (ETH ACT) 1 LED red for external fault (I/O) 1 LED red for module error (ERR) 1 LED green for module active (RUN)
Product compatibility	0...2 Ethernet module 0...256 analog I/O module 0...1024 discrete I/O module
Average consumption in mA	95 mA
Power dissipation in W	2.3 W
Marking	CE
Module format	Standard

Environment

Environmental characteristic	Standard environment
Product certifications	C-Tick GOST Merchant Navy
Standards	CSA C22.2 No 142 EN 61131-2 UL 1604 UL 508 CSA C22.2 No 213
IP degree of protection	IP20
Ambient air temperature for operation	-25...70 °C
Ambient air temperature for storage	-40...85 °C
Operating altitude	<= 2000 m
Altitude transport	<= 3000 m
Relative humidity	95 % without condensation

Abg. Carlos José Arce López
Presidente ESSAP S.A.

Ing. Olga Marecos Samaniego
Gerente de Agua No Contabilizada
essap sa

The information provided in this documentation contains general descriptions and/or technical characteristics of the performance of the products contained herein.
This documentation is not intended as a substitute for and is not to be used for determining suitability or reliability of these products for specific user applications.
It is the duty of any such user or integrator to perform the appropriate and complete risk analysis, evaluation and testing of the products with respect to the relevant specific application or use thereof.
Neither Schneider Electric Industries SAS nor any of its affiliates or subsidiaries shall be responsible or liable for misuse of the information contained herein.