PRODUCED BY AN AUTODESK STUDENT VERSION

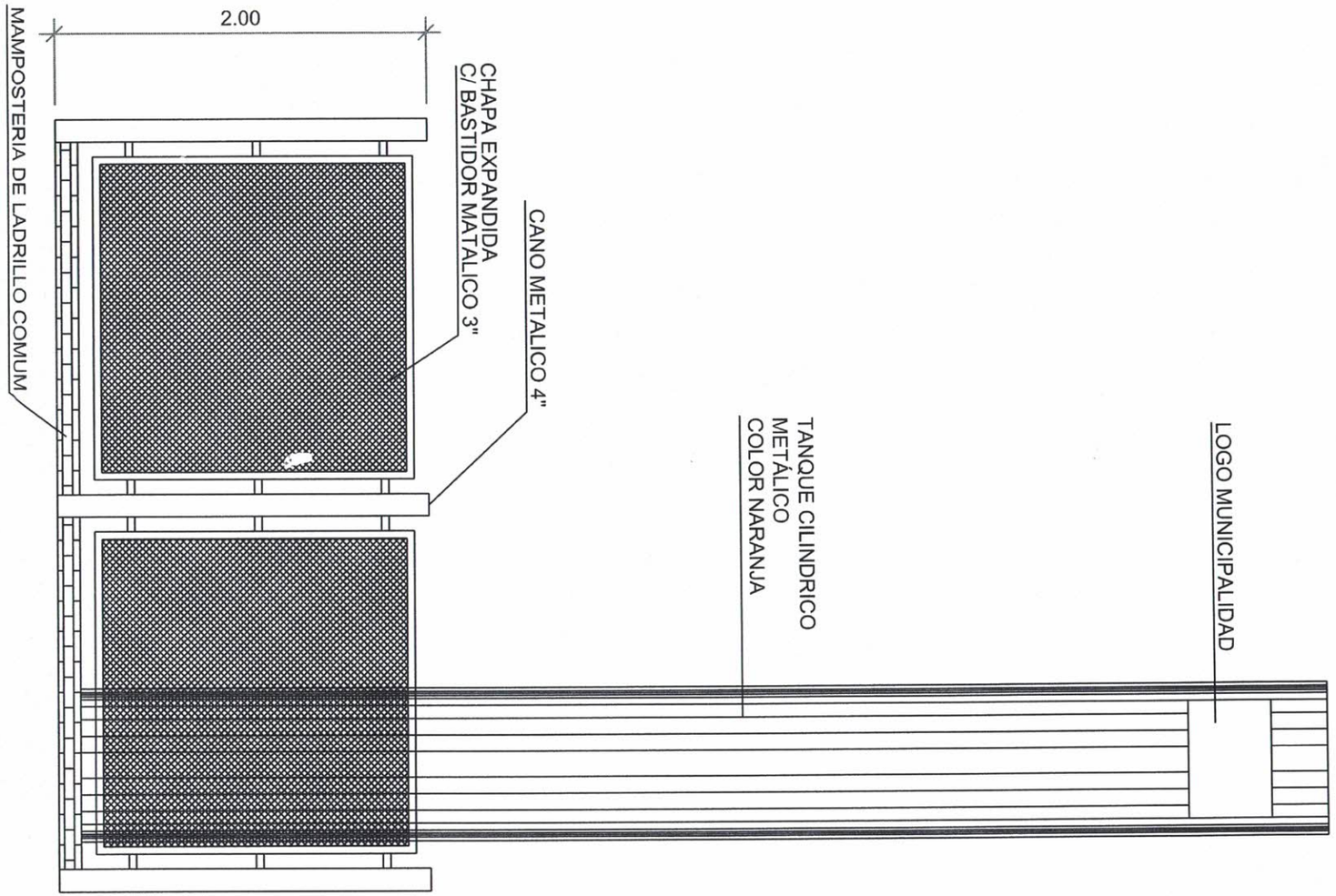

MUNICIPALIDAD DE SALTO DEL GUAIRA DEPARTAMENTO DE CANINDEYÚ - PY		PROYECTO ESC. FUGENCIO YEGROS KM5	PROYECTISTA: Arq. Porfiria A. F. Benitez REG.PROF.No. 1657	FECHA: MAYO DEL 2020	Lamina No. 1

PRODUCED BY AN AUTODESK STUDENT VERSION
PRODUCED BY AN AUTODESK STUDENT VERSION
PRODUCED BY AN AUTODESK STUDENT VERSION

PRODUCED BY AN AUTODESK STUDENT VERSION

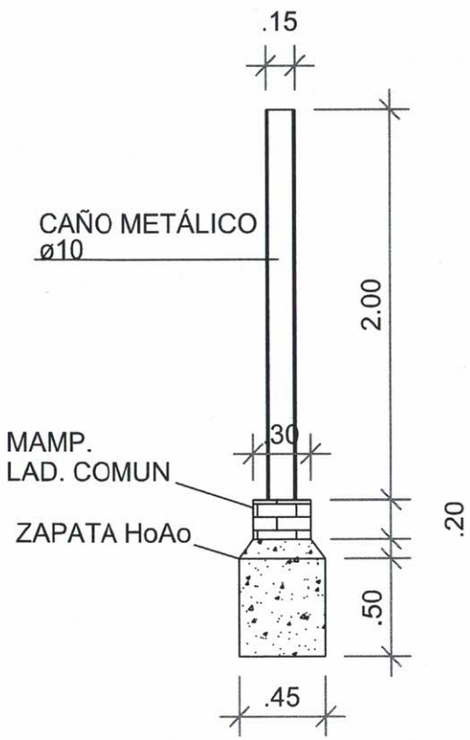

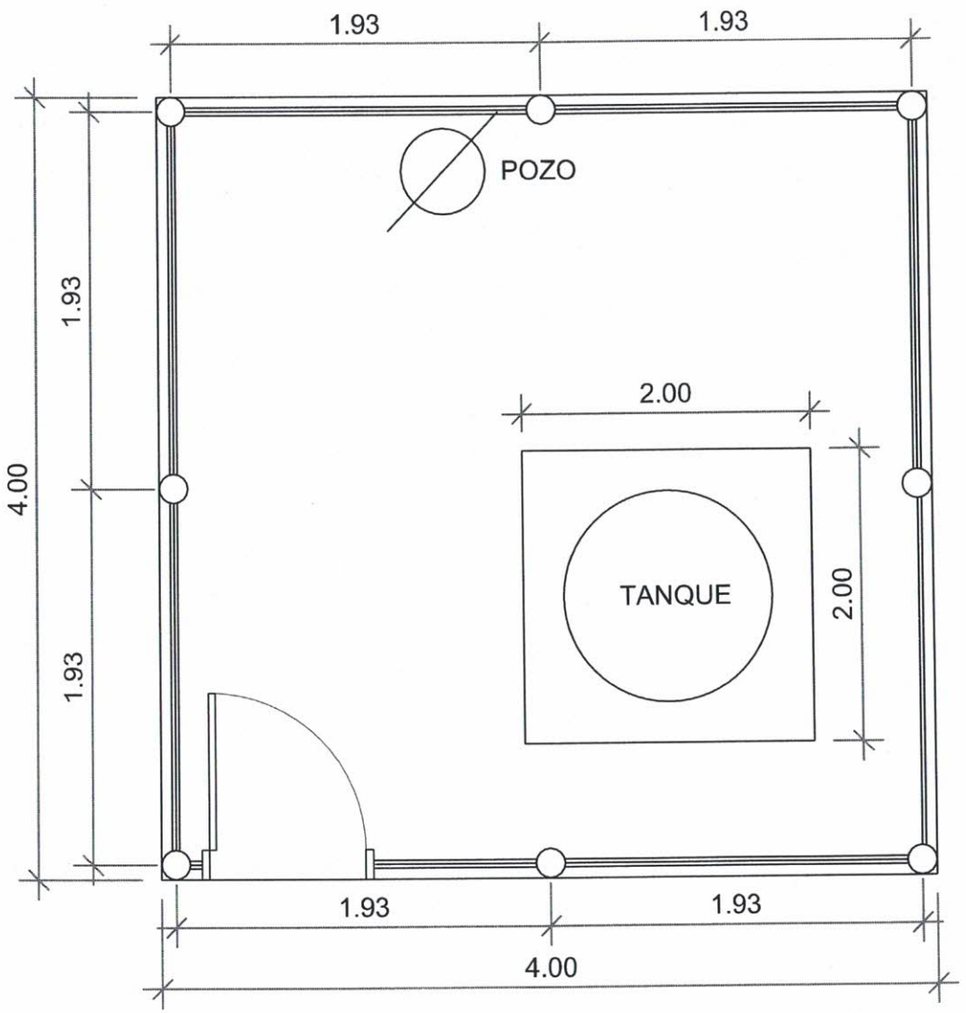

MUNICIPALIDAD DE SALTO DEL GUAIRA DEPARTAMENTO DE CANINDEYÚ - PY		PROYECTO ESC. FUGENCIO YEGROS KM5	PROYECTISTA: Arq. Porfiria A. F. Benitez REG.PROF.No. 1657	FECHA: MAYO DEL 2020	Lamina No. 1

PRODUCED BY AN AUTODESK STUDENT VERSION
PRODUCED BY AN AUTODESK STUDENT VERSION
PRODUCED BY AN AUTODESK STUDENT VERSION